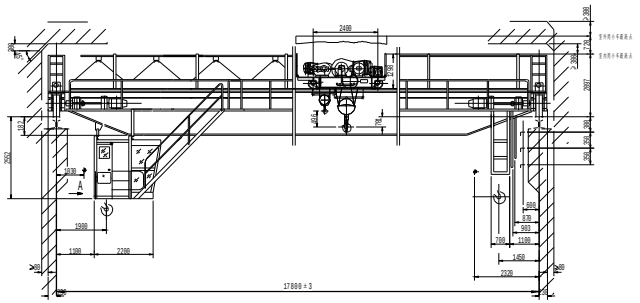

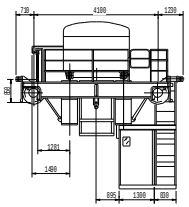

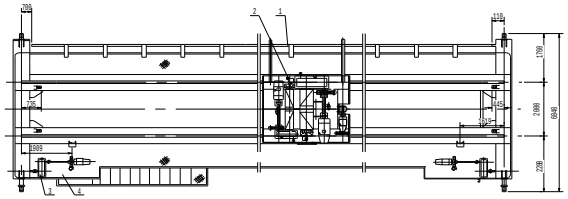

Technical Parameters

Item \ Mechanism		Lifting Mechanism: Main Part	Lifting Mechanism: Auxiliary Part	Item \ Mechanism		Slewing Traveling Mechanism	Crane Traveling Mechanism
Lifting Capacity	t	20	5	Gauge	mm	2800	17800
Lifting Speed	M/MIN	7.2	12.7	Traveling Speed	M/ MIN	44.2	49.8
Working Level		M5	M5	Working Level		M5	M5
Max Lifting Height	M	12	14	Wheelbase	mm	2400	4300
Power Supply		A.C. Three-phase		50 Hz	380V		
Brake Structure		ME(B)-25.5-201	ME(B)-13.5-101	Buffer Stroke	mm	69	140
Limit Switch		8	4	Rail		24Kg/m	43Kg/m or QU70
Motor Working Mode	S/B	27.8	12.8	Wheel Diameter	mm	Φ350	Φ700
Reel Diameter	MM	Φ500×2500	Φ400×2500	Wheel Pressure	t/ N	8.53	17.8
Motor	Type	YZR225-8	YZR160-6	Motor	Type	YZR132M2-6	YZR132M2-6
	Power KW	26	13		Power KW	4	3.7×2
	Speed r/min	700	912		Speed r/min	908	908
Reducer	Type	ZQD650-II-3CA	ZSD80-I-3CA	Reducer	Type	ZSC-400	ZQA80-IV
	Ratio i	48.17	48.57		Ratio i	27	20.49
Brake	Type	YWZ-300/45	YWZ-300/25	Brake	Type	YWZB-200/25	YWZB-200/25
	Torque N.M	630	320		Brake Torque	200	2×200
	Brake Type	YT,-452/5	YT,-252C/4		Brake Type	YT,-252B/4	YT,-252B/4
Limit Switch		8KZ Multi-function		Limit Switch		LX10-11	LX10-11

Technical Requirements

1.The crane must be comply with the regulations of GB/T 14405-93.

2.The cabinet can be installed on the left or right side.

No.	Code	Name	Material	Qty.	Unit Weight (kg)	Total Weight (kg)
4	QD20/5.3	Body Structure	"	1	12884	12884
3	QD20/5.2	Crane Traveling Mechanism	"	1	2531	2531
2	QD20/5.1	Trolley	"	1	6856	6856
1		Electrical Device	Parts	1	1270	1270

Weight(kg)	Ratio
23541	1:50

ZZHZ

Overhead Crane

QD20/5-17.8-10

QD

QD20/5.0